	LEQ: What are the steps needed to find surface area?
Surface Area Why is the shape of the base of a 3D shape important when finding surface area?	the amount of space covering a 3-D figure 1. redraw the base 2. area of base 3. perimeter of base 4. height of the prism between the bases 5. Formula: SA = 2B +PH

Let's find some SA with the formulas....

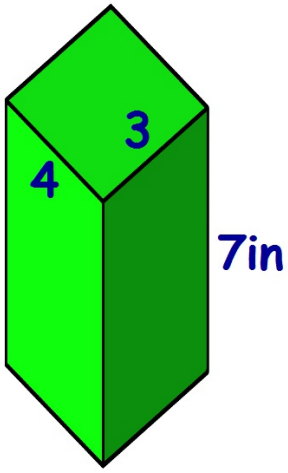

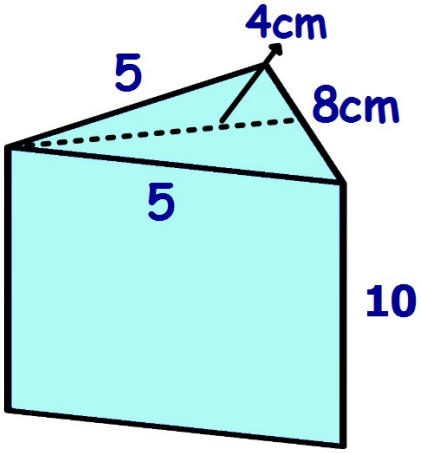

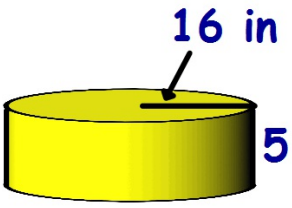

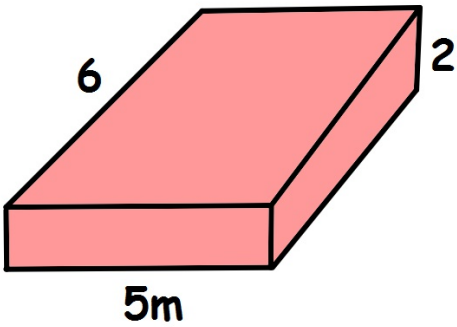

SA = 2B + PH

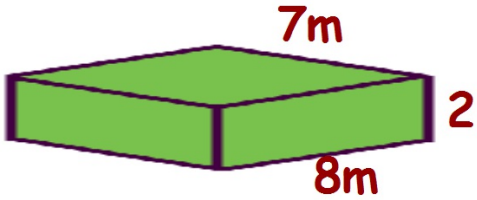

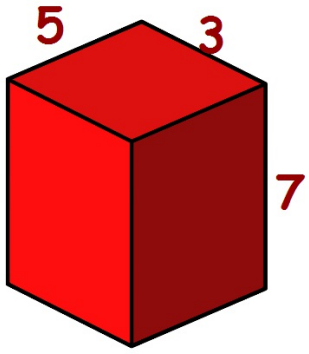

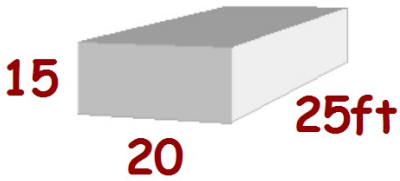

Base Area	Perimeter	Height (number between the bases)	SA=2B +PH

1] redraw the base
2] find B (area of the base)
3] find P (perimeter of base)
4] Formula
$SA = 2B + PH$

Ex)

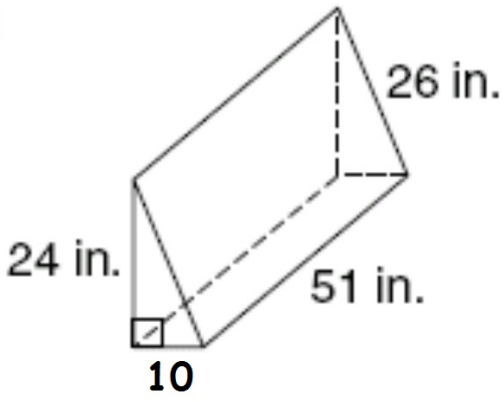

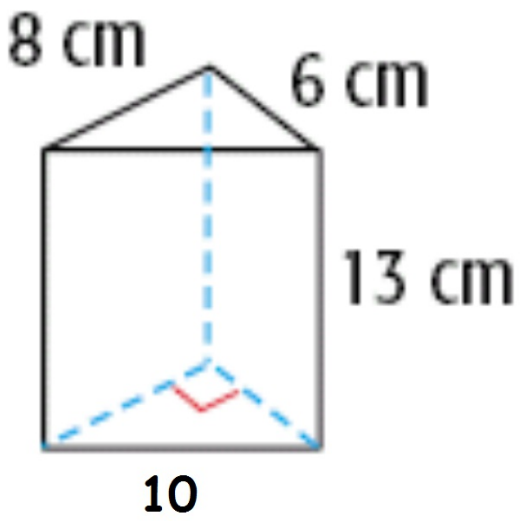

1] redraw the base

2] find B (area of the base)

3] find P (perimeter of base)

4] Formula

$SA = 2B + PH$

1] redraw the base

2] find B (area of the base)

3] find P (perimeter of base)

4] Formula

$SA = 2B + PH$

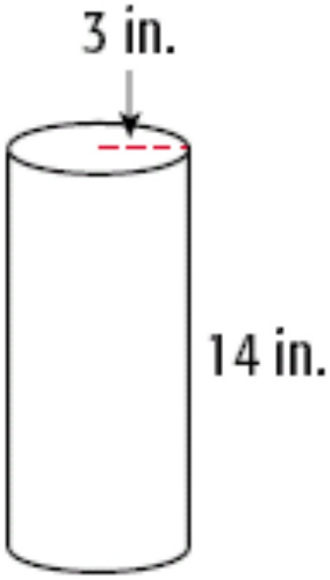

1] redraw the base

2] find B (area of the base)

3] find P (perimeter of base)

4] Formula

$SA = 2B + PH$

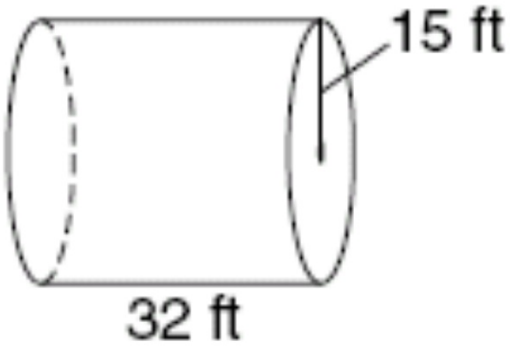

1)

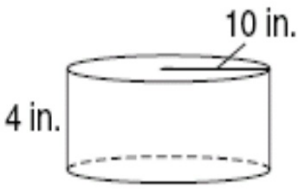

2)

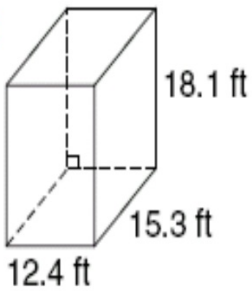

3)

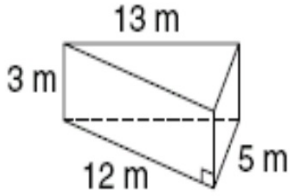

1] redraw the base

2] find B (area of the base)

3] find P (perimeter of base)

4] Formula

$SA = 2B + PH$